Mini Refrigerator Storage

8109XXXCOM

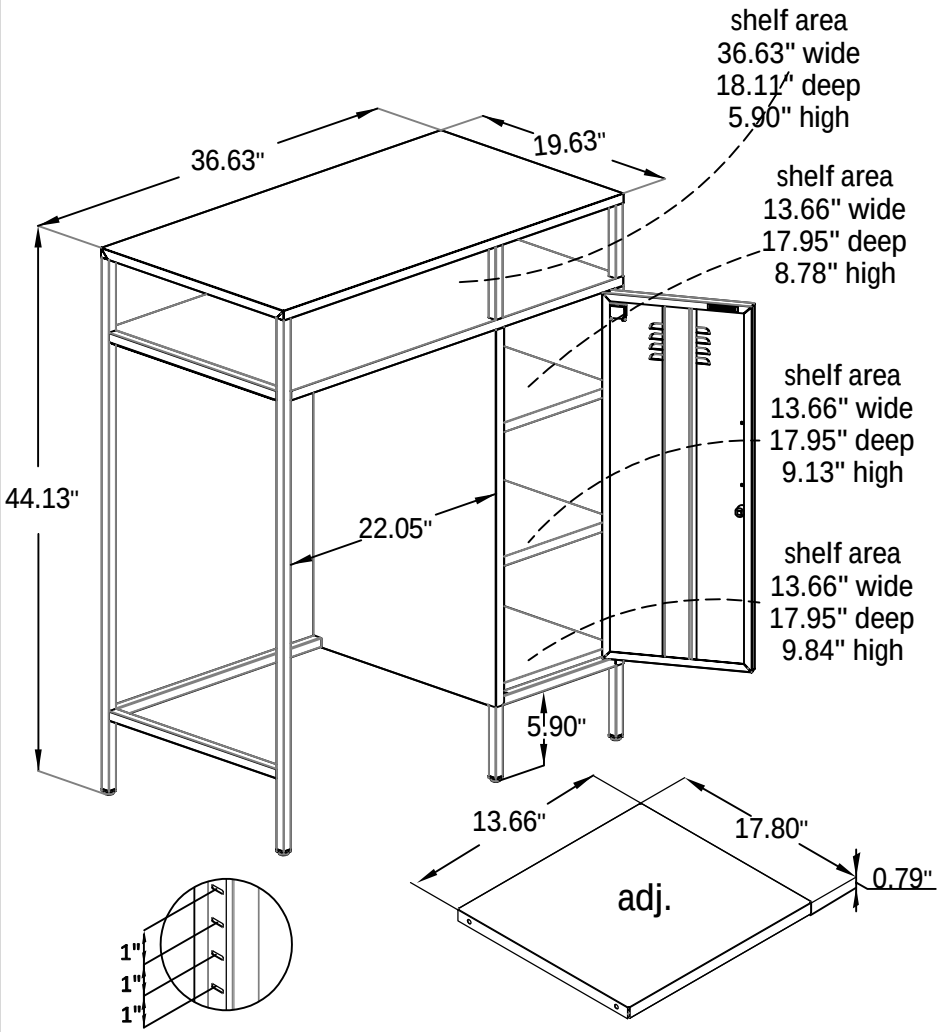

Overall Product Size:
36.63W x19.63"D x 44.13"H
93cm W x 50cm D x 112cm H

Total Storage:6.20cubic feet

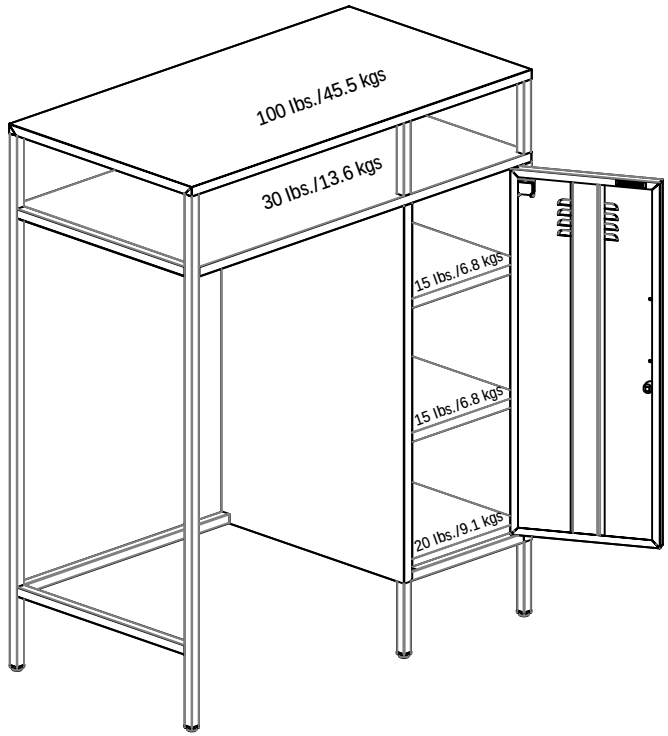

Maximum Weight Capacities
Unit Weight: 50.6 lbs (23 kg)